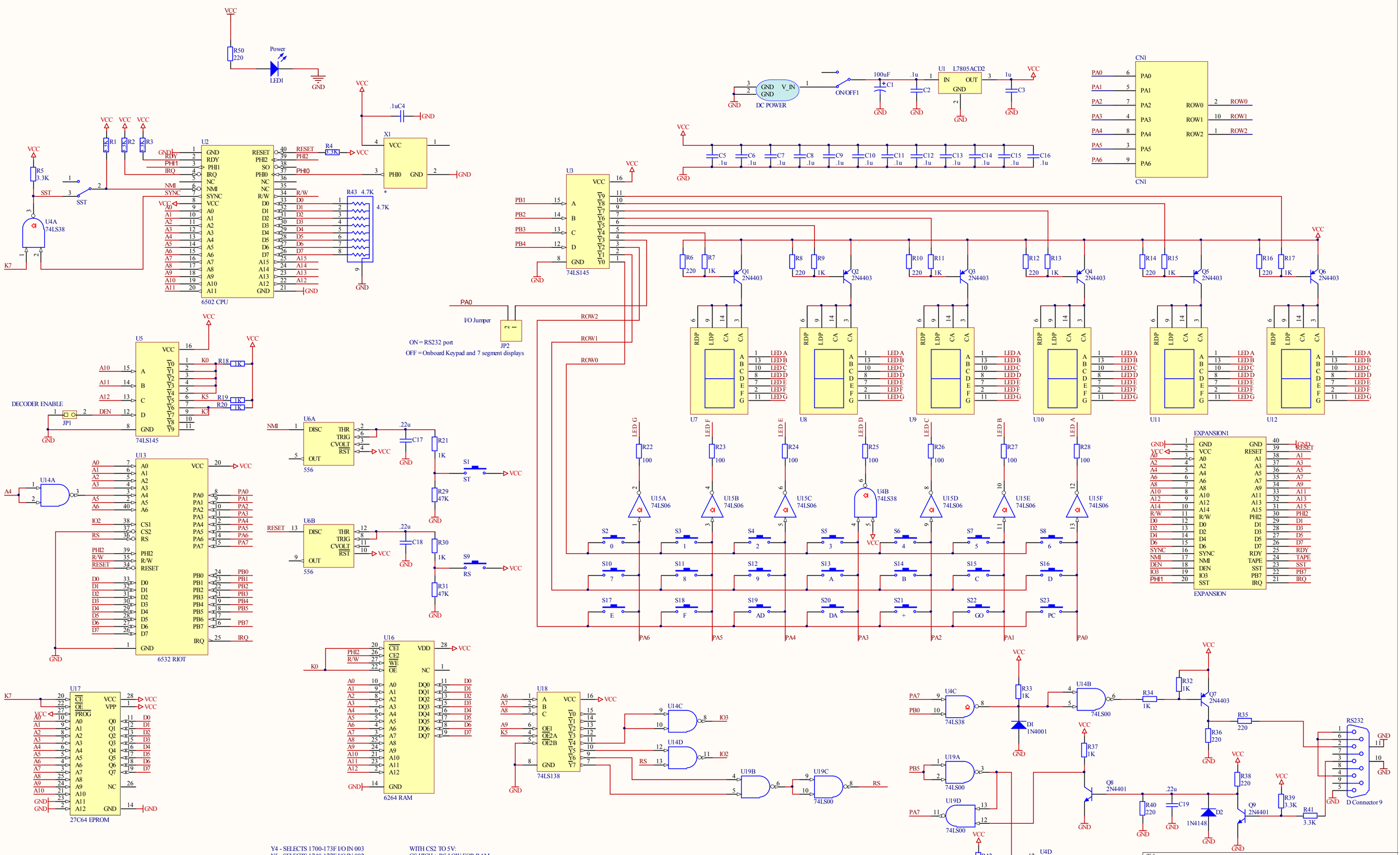
6502 CPU
6532 RIOT
27C64 EPROM
6264 RAM
74LS145
74LS138
556
DC POWER
ON/OFF1
L7805ACD2
EXPANSION
D Connector 9
RS232
I/O Jumper
ON = RS232 port
OFF = Onboard Keypad and 7 segment displays
DECODER ENABLE
Y4 - SELECTS 1700-173F I/O IN 003
Y5 - SELECTS 1740-177F I/O IN 002
Y6 - SELECTS 1780-17BF RAM IN 6532
Y7 - SELECTS 17C0-17FF RAM IN 6532
K5 DECODES TO 1400-17FF
WITH CS2 TO 5V:
CS HIGH + RS LOW FOR RAM
CS HIGH LOW RS HIGH FOR IO
IO3 OR IO4 HIGH SELECTS CS1
ALL 6532 128 BYTES OF RAM USED IN U13
Title
Micro-KIM
Size
Legal
Number
Version 1
Revision
1
Date:
7/21/2009
Sheet 1 of 1
File:
C:\Program Files\...\MicroKIM25.SchDoc
Drawn By:
Vince Briel